Finnmap Infra

VEJTEKNOLOGI
ÅRSMØDE 26-28 MAJ 2019 DANMARK

nvf

Automated control of asphalt paving machinery in relative coordinate system

Mikko Ailisto / 26.5.2019
Mikko.ailisto@finnmap-infra.fi

Finnmap Infra

UNIVERSITY OF OULU

Presentation overview

1. Introduction
2. Research aim
3. Research results
4. Research conclusions

VEJTEKNOLOGI
ÅRSMØDE 26-28 MAJ 2019 DANMARK

nvf

Finnmap Infra UNIVERSITY OF OULU

1. Introduction

BIM and Machine control in general

- BIM
  - **B**uiliding **I**nformation **M**odeling
- Machine control (MC)
  - Accurate positioning & utilization of design models

Finnmap Infra UNIVERSITY OF OULU

1. Introduction

BIM and MC based paving

- Main phases
  1. Initial data is acquired by mobile laser scanning (condition of the road surface) and ground penetration radar (layers of the pavement/road)
  2. The analysis of the road's present condition from the initial data
  3. 3D-design of the pavement rehabilitation with CAD-software
  4. Milling and paving executed with machine control
  5. The analysis of the new, repaired pavement by mobile laser scanning

VEJTEKNOLOGI ÅRSMØDE 26-28 MAJ 2019 DANMARK nvf

Finnmap Infra UNIVERSITY OF OULU

1. Introduction

Initial data for design & Analysis of the road condition

- Model of the road's surface with Mobile laser scanning

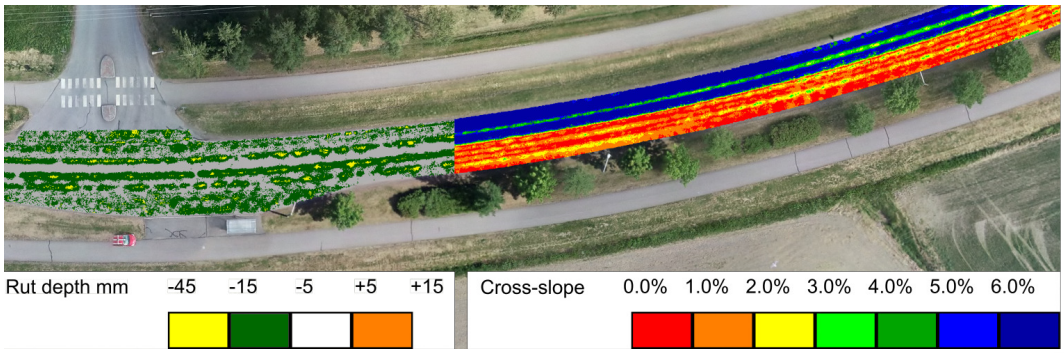

Finnmap Infra UNIVERSITY OF OULU

1. Introduction

Initial data for design & Analysis of the road condition

- Layers of the pavement/road

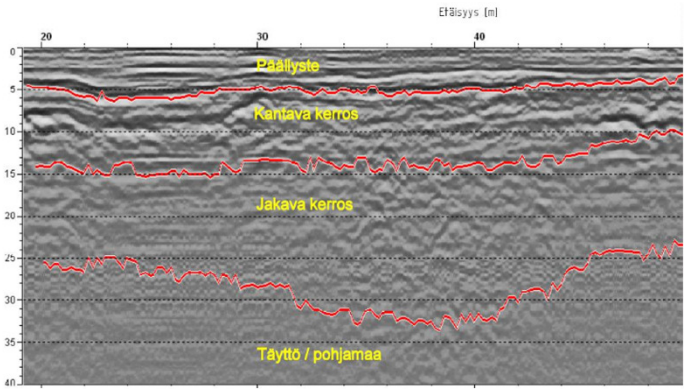

Finnmap Infra UNIVERSITY OF OULU

1. Introduction

Design-phase

- 3D-design with CAD-software
  - E.g. Microstation

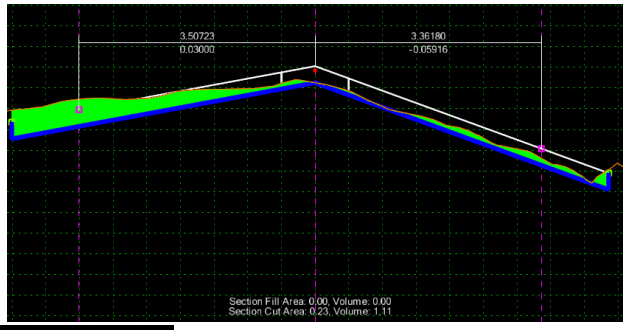

Designed cut & fill (green: milling)

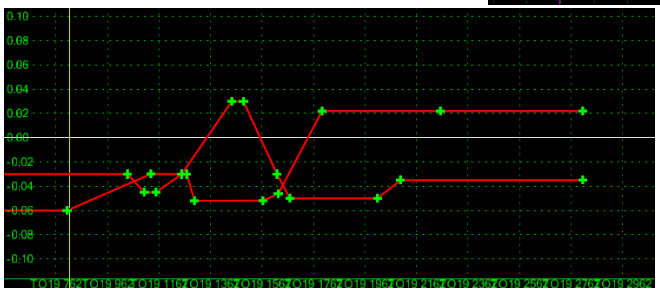

Designed Slope (both lanes)

VEJTEKNOLOGI ÅRSMØDE 26-28 MAJ 2019 DANMARK nvf

Finnmap Infra UNIVERSITY OF OULU

1. Introduction

Execution with machine control

- Automated 3D machine control
  - Global XY-coordinates
  - Global elevation (i.e. absolute Z-coordinate)
- Guiding machine control
  - Global XY-coordinates
  - Z relative to prevailing surface
  - ”manual” control

VEJTEKNOLOGI ÅRSMØDE 26-28 MAJ 2019 DANMARK nvf

Finnmap Infra UNIVERSITY OF OULU

1. Introduction

Benefits

- Repair of the road geometry to achieve specific aims (e.g. to make longitudinal or transversal slopes better)
  - Increasing driving safety
  - Making paving cycles longer
- Better process to allocate funds for the most problematic parts of the road (optimization of the rehabilitation)
  - Better tendering process
  - More efficient tendering with accurate information
  - More accurate mass volumes
  - Smaller risks, fewer unclarities
- Production of digital information from the road
  - Utilization of information models throughout the life cycle of the road

Finnmap Infra UNIVERSITY OF OULU

2. Research aim

1. GNSS receiver & antenna
2a. Ultrasonic sensor
- **Determination of milling drums relative depth**

2b. Ultrasonic sensor
- **Automatic measurement of milling depth**

3. Slope sensor
4. Computer and computer screen

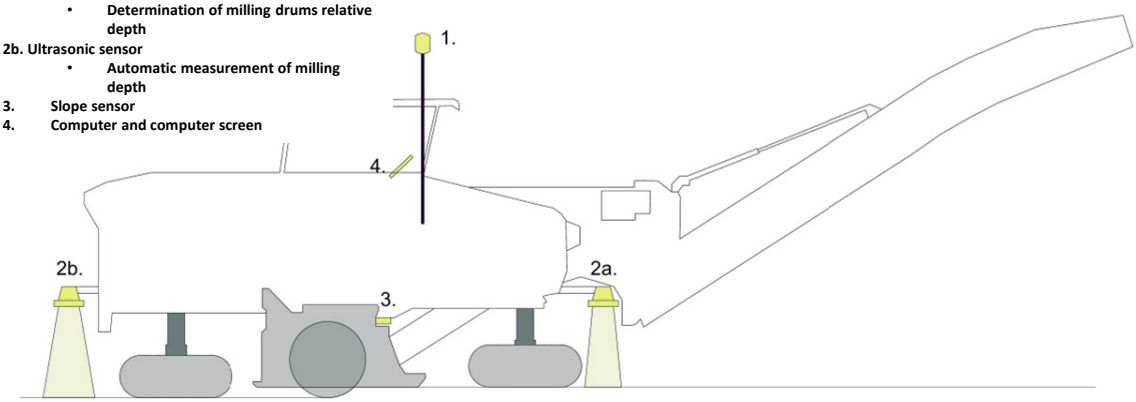

Finnmap Infra UNIVERSITY OF OULU

2. Research aim

1. Research the economy of the method
2. Research the accuracy of the method
3. Development of machine control model

Finnmap Infra UNIVERSITY OF OULU

3. Results

Economy of the method

- Research methods
  - Interviews
  - Cost-information from actual projects
  - Cost-information from MC components
- Results
  - Economy is very good
  - Low costs in
    - Initial data gathering
    - Components
    - Operation

3. Results

Accuracy of the method

- Research methods
  - Interviews
  - Information from actual paving projects with current methods
  - Information from component manufacturers
  - Statistical methods
- Results
  - Method is accurate enough to meet tolerances set by the client

Finnmap Infra UNIVERSITY OF OULU

3. Results

Accuracy of the method

	Elevation [m]		Slope [%-point]	
	Milling	Paving (leveling)	Milling	Paving (leveling)
Standard error*	0.009	0,007	0,17	0,12
Probability to achieve tolerances	**97,37 %**	**99.57 %**	**92,24 % (1)** **99,67 % (2)** **100 % (3)**	**98,76 % (1)** **100 % (2)** **100 % (3)**

* Presumed that there is no systematic error
1. Highways/motorways
2. Other main roads
3. Regional roads

VEJTEKNOLOGI ÅRSMØDE 26-28 MAJ 2019 DANMARK nvf

Finnmap Infra UNIVERSITY OF OULU

3. Results

Development of machine control model for the method

- Research methods
  - Interviews
  - Literary review
  - Workshop
- Results
  - Developed machine control model is suitable for the model
  - Model has an attribute which makes it less vulnerable positioning errors

VEJTEKNOLOGI ÅRSMØDE 26-28 MAJ 2019 DANMARK nvf

Finnmap Infra UNIVERSITY OF OULU

3. Results

Development of suitable machine control method

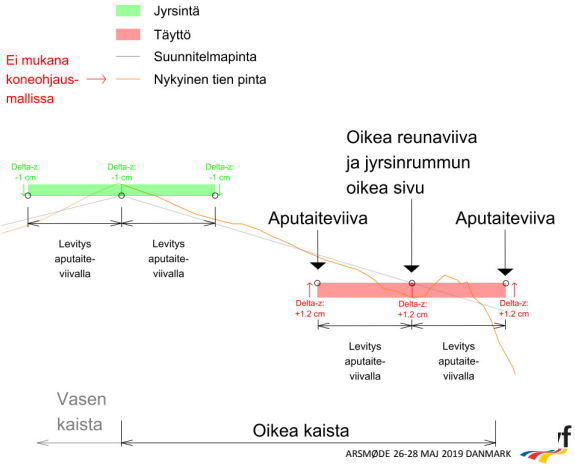

ARSMØDE 26-28 MAJ 2019 DANMARK

Finnmap Infra UNIVERSITY OF OULU

3. Results

Update of Buildingsmart Finland's Common InfraBIM Requirements guide

Marttinen Manu; Ailisto Mikko
31.12.2018

VEJTEKNOLOGI
ÅRSMØDE 26-28 MAJ 2019 DANMARK

Finnmap Infra UNIVERSITY OF OULU

4. Conclusions

CURRENT METHODS			RESEARCHED METHOD
Traditional paving	Automatic 3D machine control	Guiding machine control	Automated machine control in relative coordinate system
Results with lowest quality (not based on accurate design)	Results with high quality (i.e. accurate)	Quite easy to execute & inexpensive MC-method	Results with high quality (i.e. accurate)
Easy to execute	The data transfer between different equipment is vulnerable to disturbances	Easily disturbed actions, prone to human errors	Easier to execute & economic alternative
No machine control	Expensive	The results aren't as good quality as in automated machine control methods	Requires development of new MC system